Installation—75W (Dual-Head)

SATELIS 75W

01

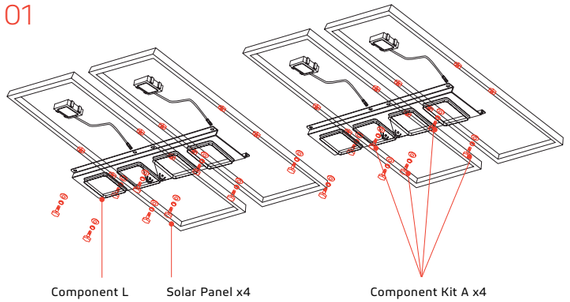

02

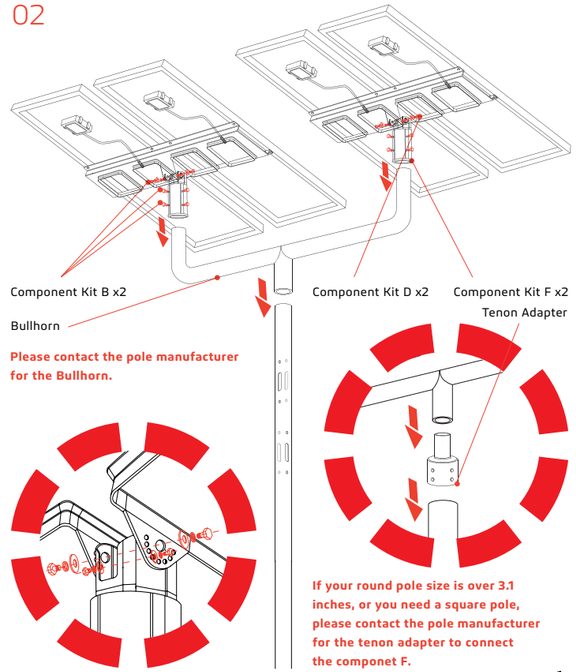

05

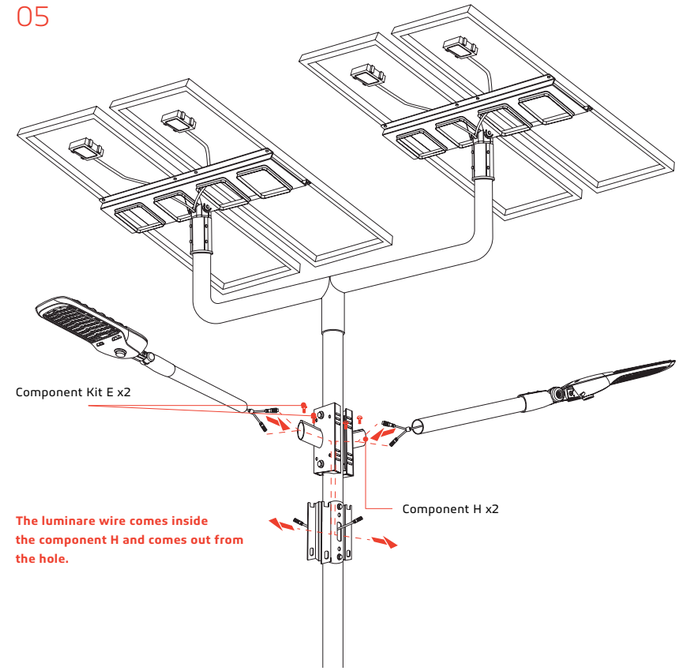

03

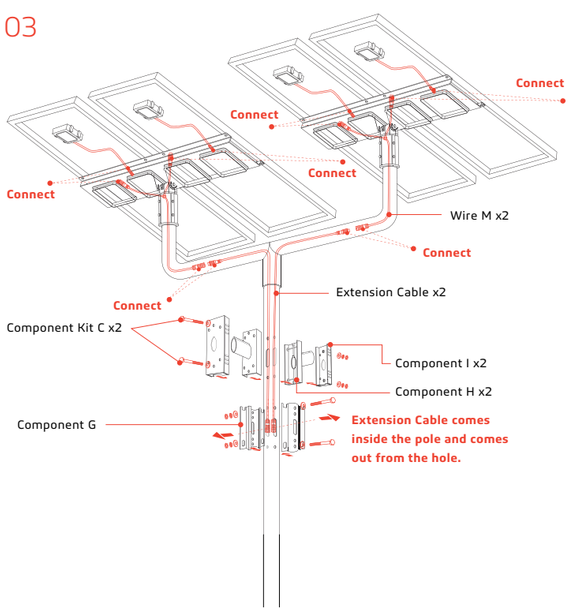

04

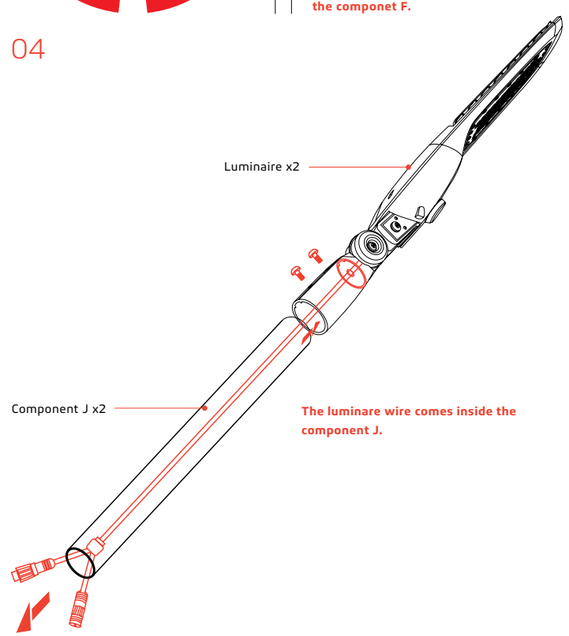
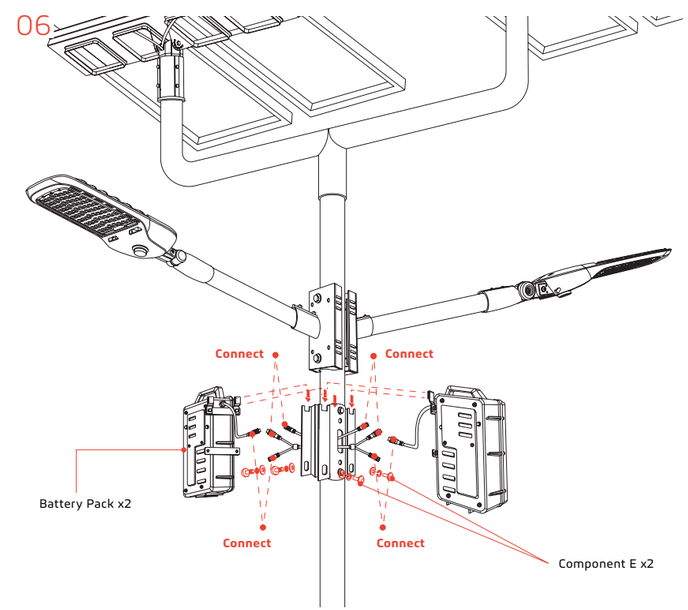
06